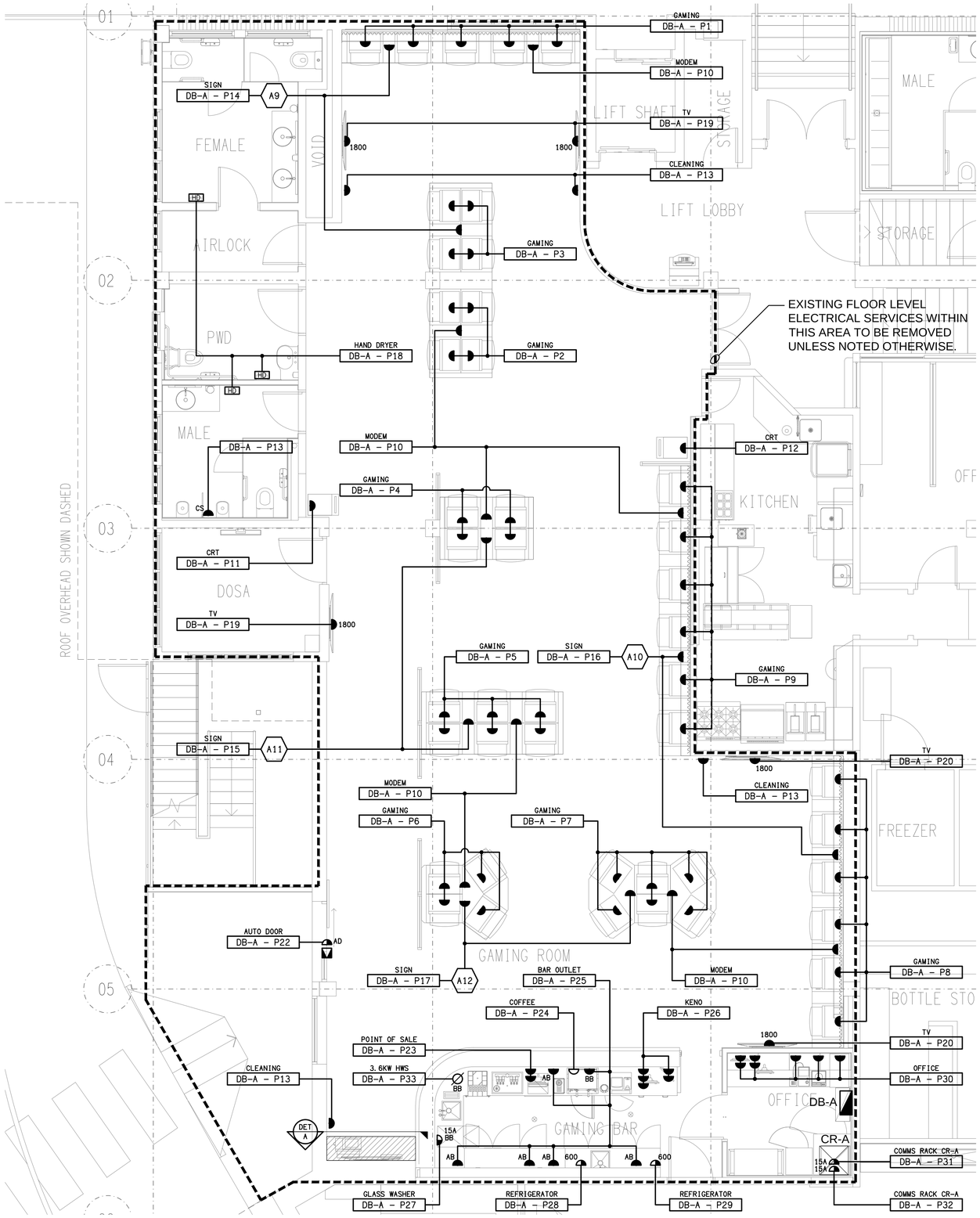

GAMING & AMENITIES

FLOOR PLAN

SCALE 1:50

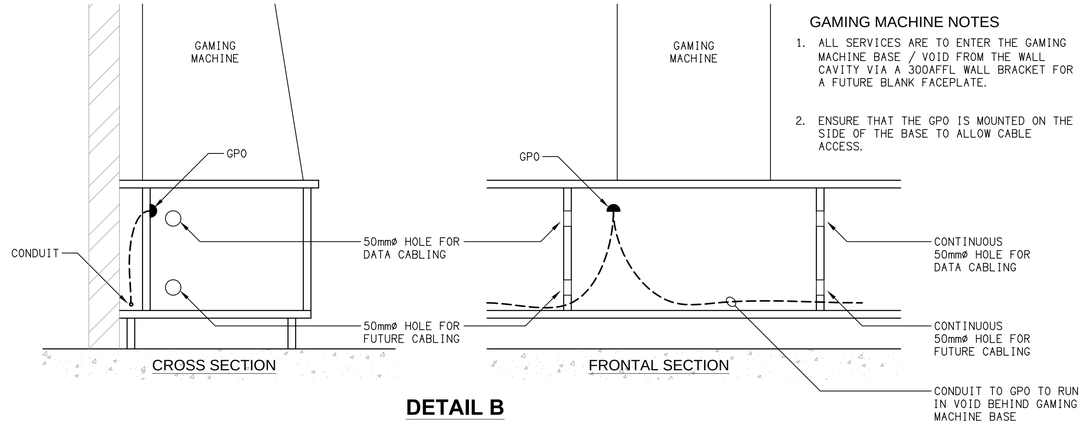

GAMING MACHINE NOTES

1. ALL SERVICES ARE TO ENTER THE GAMING MACHINE BASE / VOID FROM THE WALL CAVITY VIA A 300AFFL WALL BRACKET FOR A FUTURE BLANK FACEPLATE.
2. ENSURE THAT THE GPO IS MOUNTED ON THE SIDE OF THE BASE TO ALLOW CABLE ACCESS.

DETAIL B

GAMING MACHINE BASE

NOT TO SCALE

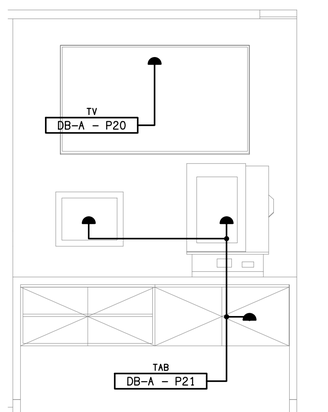

DETAIL A

GAMING ROOM TAB ELEVATION

SCALE 1:20

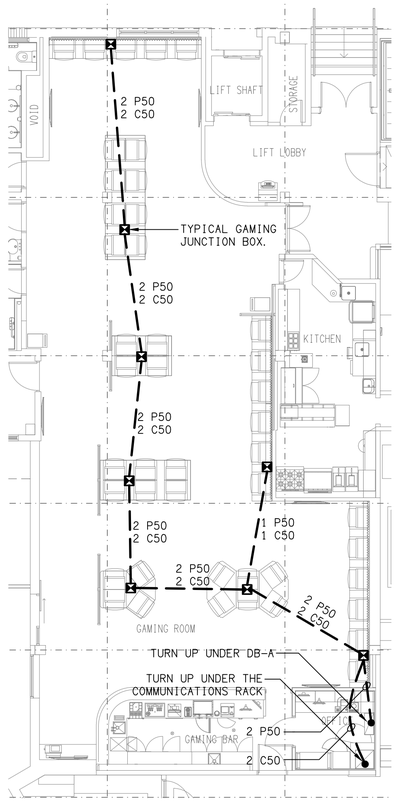

GAMING CONDUIT ACCESS

FLOOR PLAN

SCALE 1:100

REV:	DESCRIPTION:	DATE:
C	CONSTRUCTION	17/06/2025

ELECTRICAL DESIGN GROUP BRISBANE PTY LTD
ACN 092 710 793

TRADING AS:
ELECTRICAL DESIGN GROUP

THE COPYRIGHT OF THIS DRAWING REMAINS THE PROPERTY OF THE ELECTRICAL DESIGN GROUP.

USE FIGURED DIMENSIONS IN PREFERENCE TO SCALE.

ALL DIMENSIONS TO BE VERIFIED ONSITE.

ELECTRICAL DESIGN GROUP

ELECTRICAL BUILDING SERVICES CONSULTANTS

BRISBANE GOLD COAST

P.O.Box 15, Sherwood Q.4075
Phone: (07) 3278 4375
Email: brisbane@edg.net.au
Web: www.edg.net.au

PROJECT:
PRINCE OF WALES HOTEL, NUNDAH

100 BUCKLAND ROAD, NUNDAH

DRAWING:
ELECTRICAL SERVICES
GAMING ROOM & AMENITIES FLOOR PLAN

SCALE:		PROJECT NO:	DRAWING NO:	REVISION:
1:50 UNO	AT A1	C3419a	E04	C